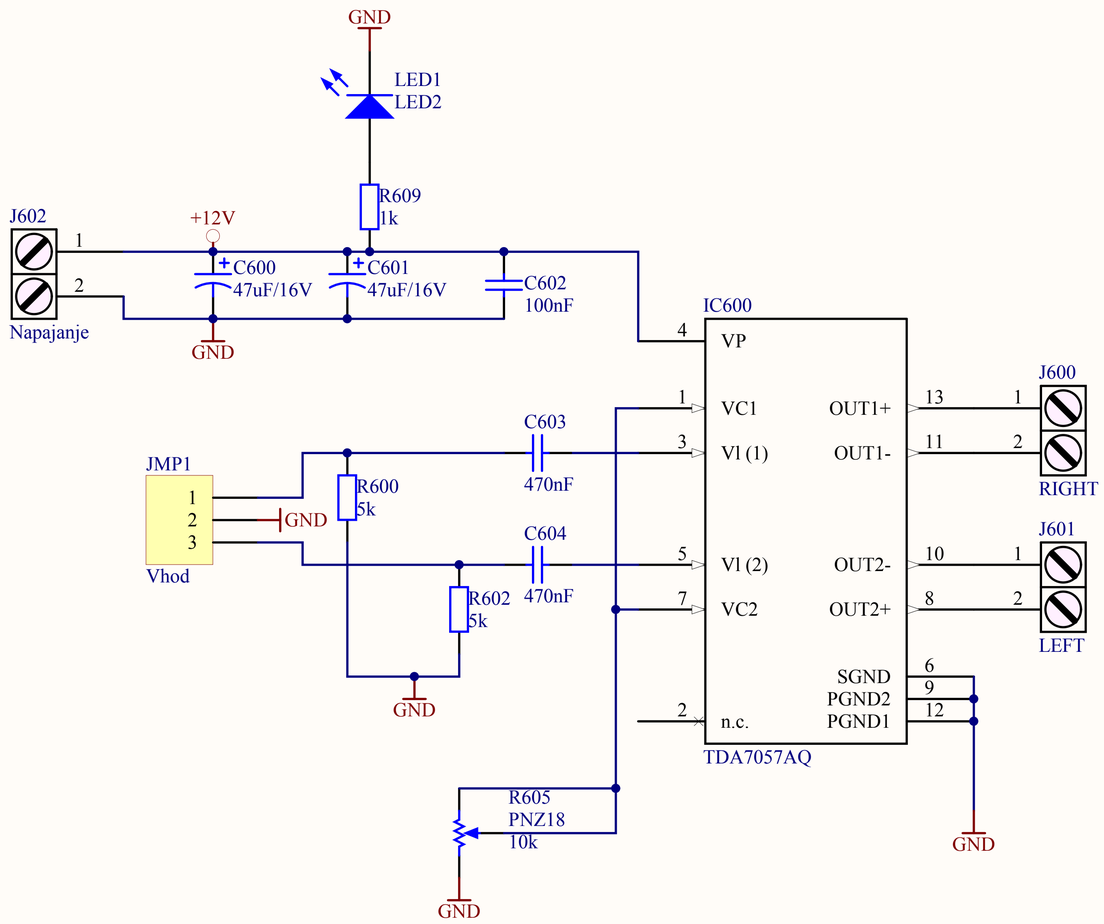
GND
LED1
LED2
R609
1k
J602
1
2
Napajanje
+12V
C600
47uF/16V
C601
47uF/16V
C602
100nF
GND
IC600
4
VP
1
VC1
3
Vl (1)
5
Vl (2)
7
VC2
2
n.c.
OUT1+
OUT1-
OUT2-
OUT2+
SGND
PGND2
PGND1
TDA7057AQ
13
11
10
8
6
9
12
J600
RIGHT
J601
LEFT
C603
470nF
C604
470nF
JMP1
1
2
3
Vhod
GND
R600
5k
R602
5k
GND
R605
PNZ18
10k
GND
GND